BRENTWOOD WHEELBARROW & MORTAR PRODUCT CATALOG

A Full Line To Handle A Full Load

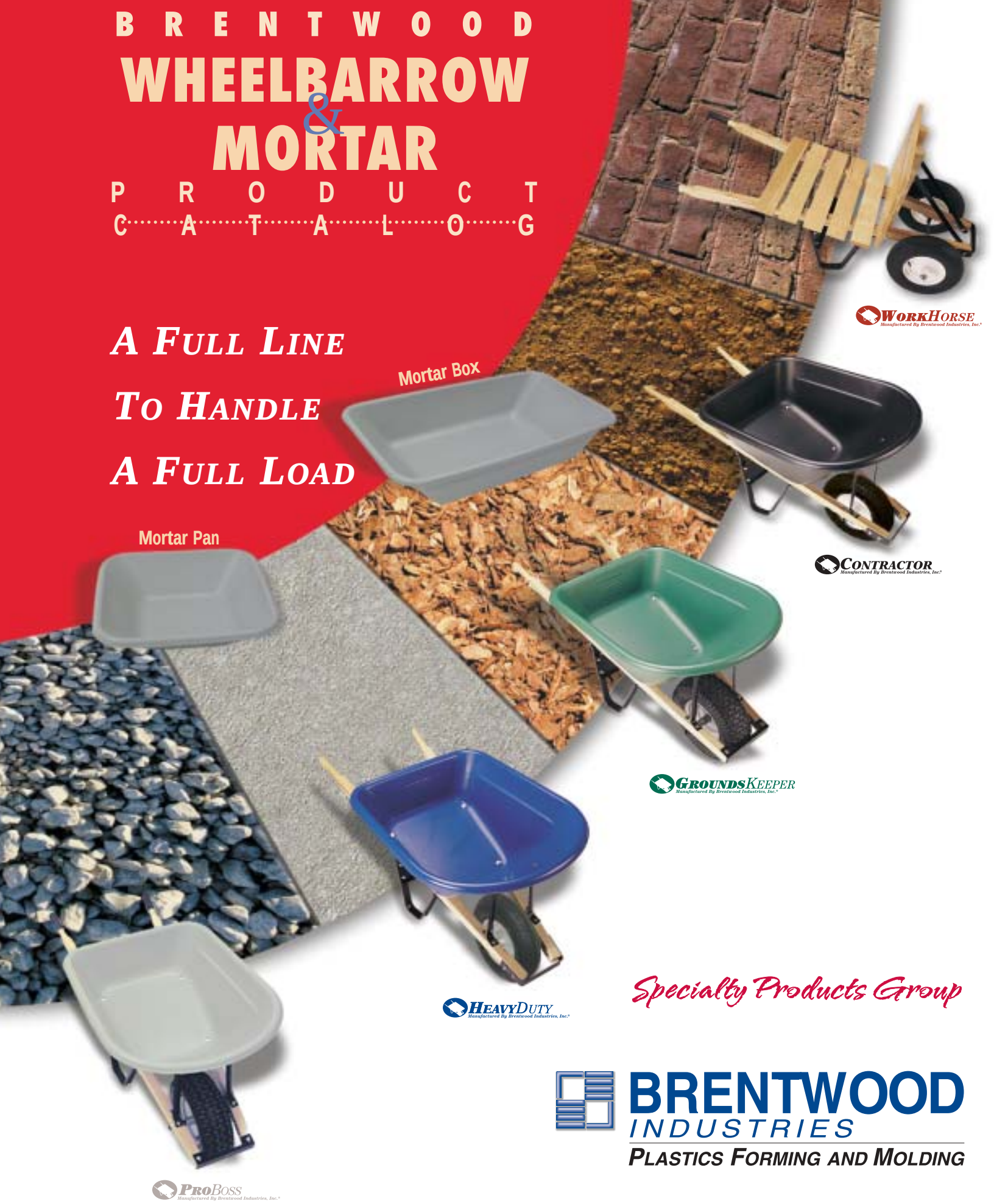

Specialty Products Group

BRENTWOOD INDUSTRIES

PLASTICS FORMING AND MOLDING

www.brentwoodindustries.com

Measurements		6'	7'	8'	10'
Dimension	A	63"	63"	63"	63"
Dimension	B	39"	43"	43"	44"
Dimension	C	28"	29"	34"	35"
Dimension	D	60"	60"	60"	60"
Dimension	E	29"	31"	31"	35"

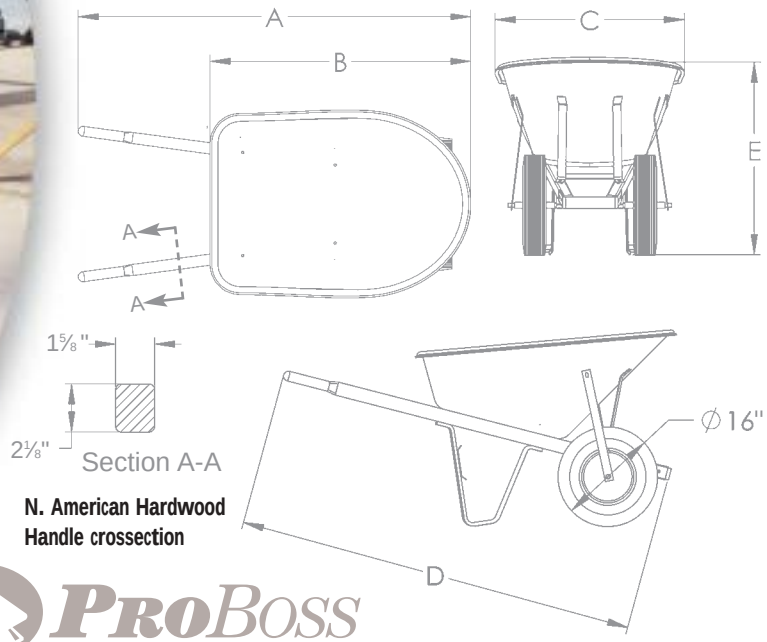

N. American Hardwood Handle crossection

PROBOSS
Manufactured By Brentwood Industries, Inc.®

ProBoss Professional grade wheelbarrows for construction, demolition, and rough job sites

Structural steel channel undercarriage will stand up to the most demanding job site work. Oversized 60" **American Hardwood handles** enable you to lift the heaviest of loads. Brentwood's UV stabilized polyethylene pan is extremely rugged, easy to clean, and stays looking good, job after job. Tire options: standard 1 wheel 6" wide tire; 2 wheel stud tire. Also available with extra heavy duty 4.80-8 4 ply rated saw tooth ribbed, and solid urethane for rough surfaces where flat tires are a problem. Provided with complimentary handle grips.

Triple-X

X-Tra Accurate

X-Tra Tuff

X-Tra Longlasting

(Pour Spout) The popular choice of professional contractors

(10 cu. ft.) Fits through 36" door opening.

(8 cu. ft.) Extra capacity for dry loads

(6 cu. ft.) The popular choice of professional contractors

(7cu. ft.) Extra heavy duty, extra deep. Fits through 30" interior door

All ProBoss includes heavy duty fasteners

PROBOSS *Steel 6*
Manufactured By Brentwood Industries, Inc.®

A premium steel contractors' wheelbarrow for asphalt and other materials that require a steel tray.

The ProBoss Steel 6 wheelbarrow has all the features of our ProBoss line with a heavy gauge gray coated steel tray.

The professionals' choice for moving asphalt and other special materials around the job site.

Model No.	Wide Chassis Brentwood Part Number	Brentwood Part Number	Description	Ship Wt each (lbs)
2 Ply Tire (single wheel with 6" turf tread & double wheel with 3" stud tread)				
PWSS	ACWB-18186*	ACWB-11689	6 Cube Steel Single Wheel	49
PW6S	ACWB-18210*	ACWB-10910	6 Cube Single Wheel	46
PW6D	ACWB-18211*	ACWB-10933	6 Cube Double Wheel	56
PW7S	ACWB-18212*	ACWB-11040	7 Cube Single Wheel	50
PW7D	ACWB-18213*	ACWB-11041	7 Cube DoubleWheel	60
PW8S	ACWB-18214*	ACWB-10911	8 Cube Single Wheel	49
PW8D	ACWB-18215*	ACWB-10912	8 Cube Double Wheel	59
PW10S	ACWB-18216*	NEW	10 Cube Single Wheel	55
PW10D	ACWB-18217*	ACWB-10913	10 Cube Double Wheel	65
16/6.50 X 8"	CCWB-16532	single wheel	6" tire/wh w/zerk fitting and ball bearing	12
4.80 X 8"	CCWB-16614	double wheel	stud tire/wh w/zerk and ball bearing	11
Solid Tire - No Flats				
PWSSF	ACWB-18188*	ACWB-11675	6 Cube Steel Single Solid Wheel	51
PW6SF	ACWB-18225*	ACWB-11676	6 Cube Single Solid Wheel	48
PW6DF	ACWB-18226*	ACWB-11677	6 Cube Double Solid Wheel	60
PW7SF	ACWB-18227*	ACWB-11678	7 Cube Single Solid Wheel	52
PW7DF	ACWB-18228*	ACWB-11679	7 Cube Double Solid Wheel	64
PW8SF	ACWB-18229*	ACWB-11680	8 Cube Single Solid Wheel	51
PW8DF	ACWB-18230*	ACWB-11681	8 Cube Double Solid Wheel	63
PW10DF	ACWB-18231*	ACWB-18167	10 Cube Double Solid Wheel	70
No flat tire	CCWB-16552	single or double	(No flat) tire/wh w/zerk & ball bearing	9
X-Tra Heavy Duty 4 Ply Tire				
PWSSX	ACWB-18187*	ACWB-11690	6 Cube Steel XHD Single Wheel	51
PW6SX	ACWB-18218*	ACWB-11042	6 Cube XHD Single Wheel	49
PW6DX	ACWB-18219*	ACWB-11043	6 Cube XHD Double Wheel	61
PW7SX	ACWB-18220*	ACWB-11044	7 Cube XHD Single Wheel	52
PW7DX	ACWB-18221*	ACWB-11045	7 Cube XHD DoubleWheel	60
PW8SX	ACWB-18222*	ACWB-11046	8 Cube XHD Single Wheel	50
PW8DX	ACWB-18223*	ACWB-11047	8 Cube XHD Double Wheel	64
PW10DX	ACWB-18224*	ACWB-11048	10 Cube XHD Double Wheel	70
4.80 x 8"	CCWB-16357	single or double	4 ply tire/wh with zerk & ball bearing	11
		Pour Wheelbarrow Triple-X		
Pour Wheelbarrow 2 Ply Tire (single whl has 6" turf tread double has 3" stud tread)				
PW6SP	ACWB-18258	NEW	6 Cube XHD single 6" turf tire Pour	51
PW6DP	ACWB-18259	NEW	6 Cube XHD double 3" turf tire Pour	60
16/6.50 X 8"	CCWB-16532	single wheel	6" tire/wh w/zerk fitting and ball bearing	12
4.80 X 8"	CCWB-16614	double wheel	stud tire/wh w/zerk and ball bearing	11
Pour Wheelbarrow Solid (no flat) Tire				
PW6SXP	ACWB-18262	NEW	6 Cube XHD Single Wheel Pour	52
PW6DFP	ACWB-18263	NEW	6 Cube XHD Double Wheel Pour	64
No flat tire	CCWB-16552	single or double	(No flat) tire/wh w/zerk & ball bearing	9
Pour Wheelbarrow X-Tra Heavy Duty 4 Ply Tire				
PW6SFP	ACWB-18260	NEW	6 Cube XHD Single Wheel Pour	52
PW6DFP	ACWB-18261	NEW	6 Cube XHD Double Wheel Pour	60
4.80 x 8"	CCWB-16357	single or double	4 ply tire/wh with zerk & ball bearing	11

www.brentwoodindustries.com

*Where a wide chassis is available it will no be shipped until the standard chassis is depleted. Any orders for wide chassis will automatically be shipped the standard chassis until inventory is depleted. When standard chassis is depleted the wide chassis will ship and the standard will no longer be available.

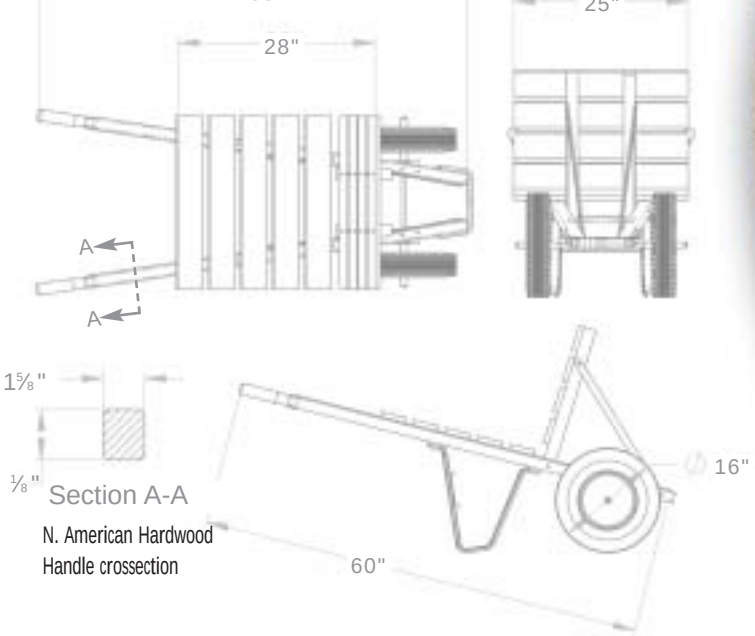

WorkHorse

Manufactured By Brentwood Industries, Inc.®

This heavy duty, 1 or 2 wheel chassis hauls brick, tile, hay, wood, and other heavy loads with ease

The **structural steel undercarriage** is the heaviest in the industry and ready to go to work on the toughest jobs. Bed and dash assembled from **North American Hardwood** with 60" handles. Tire options: standard 4.80-8 2 ply rated block tread. Also available with extra heavy duty 4.80-8 4 ply rated saw tooth ribbed, and flat free tires for rough surfaces where flat tires are a problem. This versatile wheelbarrow is great at the construction site, the farm, or the stables. Provided with complimentary handle grips.

Model No.	Wide Chassis Brentwood Part Number	Brentwood Part Number	Description	Ship Wt each (lbs)
2 & 4 Ply Tires (2 ply has stud style tread)				
PWWHS	------ ------ ------	ACWB-11468	Single Wheel (2 Ply)	63
PWWHD	------ ------ ------	ACWB-11362	Double Wheel (2 Ply)	71
PWWHSX	------ ------ ------	ACWB-11469	XHD Single Wheel (4 Ply)	65
PWWHDX	------ ------ ------	ACWB-11363	XHD Double Wheel (4 Ply)	73
4.80 X 8"	CCWB-16323	single or double	2 ply stud tire/wh w/zerk and ball bearing	11
4.80 x 8"	CCWB-16357	single or double	4 ply tire/wh with zerk & ball bearing	11

The versatility of the WorkHorse makes it an unbeatable value

The versatile WorkHorse is handy at the construction site, farm, or stables.

www.brentwoodindustries.com

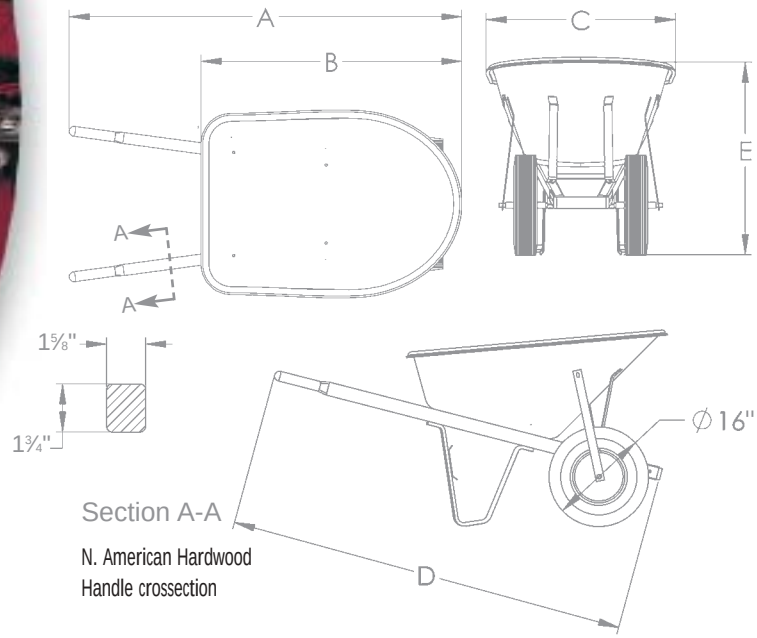

Now with a new block tread design

Measurements		6'	7'	8'	10'
Dimension	A	58"	•	58"	58"
Dimension	B	39"	•	43"	44"
Dimension	C	28"	•	34"	35"
Dimension	D	60"	•	60"	60"
Dimension	E	29"	•	31"	35"

HEAVYDUTY
Manufactured By Brentwood Industries, Inc.®

This heavy duty wheelbarrow is excellent for construction or maintenance jobs

Cold rolled steel channel undercarriage can handle demanding job site work. 60" **North American Hardwood handles** for easy maneuvering and lifting of dry or wet loads. UV stabilized polyethylene pan looks good and lasts for years. 4.80-8 2 ply block tread tires and top grade fasteners are standard equipment.

The years of service you get from HeavyDuty keep job costs down

Model No.	Wide Chassis Brentwood Part Number	Brentwood Part Number	Description	Ship Wt each (lbs)
2 Ply Tire Wheelbarrow with block style tread				
HD6S	----- ----- -----	ACWB-11150	6 Cube Single Wheel	35
HD6D	----- ----- -----	ACWB-11151	6 Cube Double Wheel	44
HD8D	----- ----- -----	ACWB-11152	8 Cube Double Wheel	46
HD10D	----- ----- -----	ACWB-11153	10 Cube Double Wheel	52
4.80 X 8"	single or double	CCWB-16323	Tire/wh w/oillite bearing block tread	7

(8 cu. ft.) Great for work around the home

All wheelbarrows includes heavy duty fasteners

(6 cu. ft.) Available in 1 or 2 wheel chassis

(10 cu. ft.) Many uses on the job site

TÜV MANAGEMENT SERVICE ISO 9001 QS-9000

www.brentwoodindustries.com

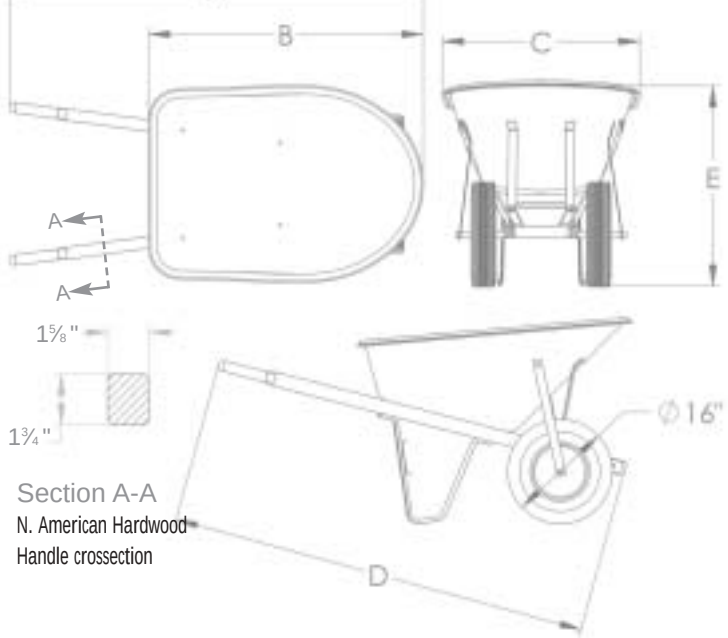

Section A-A
N. American Hardwood
Handle crossection

Measurements		6'	7'	8'	10'
Dimension	A	58"	•	58"	58"
Dimension	B	39"	•	43"	44"
Dimension	C	28"	•	34"	35"
Dimension	D	60"	•	60"	60"
Dimension	E	29"	•	31"	35"

GroundsKeeper

Manufactured By Brentwood Industries, Inc.®

The ideal wheelbarrow for the landscaper, gardening professional, homeowner, and golf course maintenance

Cold rolled steel chassis resists corrosion and holds up to wear and tear. 60" **N. American Hardwood** handles resist bending or breaking. UV stabilized polyethylene pan reduces scratching, denting, fading, and never rusts. 6" wide oversized turf tread pneumatic tire is easier to handle in stones, mulch, and soft ground.

Model No.	Wide Chassis Brentwood Part Number	Description	Ship Wt each (lbs)
6" Turf 2 Ply Tire			
GK6S	ACWB-11660	6 Cube Single Wheel38	
GK6D	ACWB-11663	6 Cube Double Wheel	49
GK6SSF	ACWB-18242	6 Cube Flat Front Single Wheel	38
GK6DSF	ACWB-18243	6 Cube Flat Front Double Wheel	49
GK8S	ACWB-11661	8 Cube Single Wheel	41
GK8D	ACWB-11664	8 Cube Double Wheel	52
GK10S	ACWB-11662	10 Cube Single Wheel	53
GK10D	ACWB-11665	10 Cube Double Wheel	58
GKMO	ACWB-11691	Monticello Garden Cart, 5cu	40
16/6.50 X 8"	CCWB-16532	6" tire/wh w/zerk fitting and ball bearing	12

(6 cu.ft.) Flat nose for easy dumping

GroundsKeeper's unique design and ease-of-use is the ultimate value

(10 cu.ft.) Available in 1 or 2 wheel versions

(6 cu.ft.) Pivot point nose for easy dumping

All Groundskeeper includes heavy duty fasteners

The built-in shelf tray makes home gardening easy

The wheelbarrow no home should be without. Featuring Brentwood's unique tiered, built-in shelf tray with pockets.

Model No.	Product / Part No.	Description	Ship Wt. / Ea. (Lbs.)
GKMO	ACWB-11691	Monticello Garden Cart Single Wheel, 5 Cu. Ft.	40

(8 cu.ft.) Available in 1 or 2 wheel versions

www.brentwoodindustries.com

Now with a new block tread design

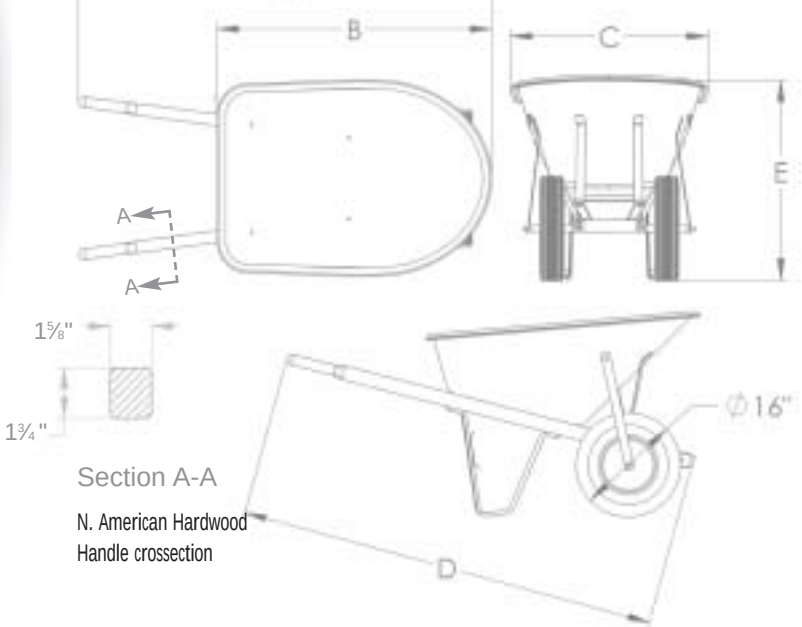

Measurements		6'	7'	8'	10'
Dimension	A	58"	•	58"	58"
Dimension	B	39"	•	43"	44"
Dimension	C	28"	•	34"	35"
Dimension	D	60"	•	60"	60"
Dimension	E	29"	•	31"	35"

CONTRACTOR

Manufactured By Brentwood Industries, Inc.®

A quality wheelbarrow for contractors and the do-it-yourself homeowner

These wheelbarrows can perform any job you have. Cold rolled steel undercarriage, and 60" **N. American Hardwood Handles** provide enough strength for the toughest contractor or homeowner applications. Available in one or two wheel designs with 4.80-8 2 ply block tread tires. UV stabilized pan keeps this wheelbarrow looking good for many years.

Contractors quality at a homeowners price

Model No.	Brentwood Part Number	Description	Ship Wt each (lbs)
2 Ply Tire Wheelbarrow with block style tread			
AJSS	ACWB-11688	6 Cube Steel Single Wheel	49
AJ6S	ACWB-11342	6 Cube Single Wheel	33
AJ6D	ACWB-11343	6 Cube Double Wheel	39
AJ8S	ACWB-11344	8 Cube Single Wheel	36
AJ8D	ACWB-11345	8 Cube Double Wheel	42
AJ10D	ACWB-11346	10 Cube Double Wheel	48
4.80 X 8"	CCWB-16323	Tire/wh w/oillite bearing block tread	7

CONTRACTOR STEEL6

Manufactured By Brentwood Industries, Inc.®

A top grade steel wheelbarrow for asphalt and other wheelbarrow applications that require a steel tray.

The Contractor Steel 6 features a heavy gauge black powder coated steel tray.

Great for hauling asphalt and other materials only steel can handle

A Heavy Duty wheelbarrow at an economical price

(8 cu. ft.) Extra capacity for the biggest jobs

(10 cu. ft.) Big capacity for large properties

(6 cu. ft.) Easy to maneuver around your home

TÜV MANAGEMENT SERVICE ISO 9001 QS-9000

www.brentwoodindustries.com

Mortar Handling Products

Made from extra high density, UV stabilized polyethylene.
No rust or corrosion, and easy cleanup. Half the weight of steel.

Mortar Pans

Performance exceeds steel
MP30E (Black)
Pan size: 30" x 30" x 7" deep
Economy Grade

Performance exceeds steel
MP30 (Gray)
Pan size: 30" x 30" x 7" deep
Premium Grade

Mortar Boxes

Big Mixing Box – only 26 lbs.
Easier to transport
MB60 (Gray)
Pan Size: 32" x 60" x 11" deep
Premium Grade

Big Mixing Box – only 22 lbs.
Easier to transport
MB60E (Black)
Pan Size: 32" x 60" x 11" deep
Economy Grade

Mortar Boards

Performance exceeds steel
MBDE24 (Black)
Board size: 24" x 24"
Economy Grade

Performance exceeds steel
MBD24 (Gray)
Board size: 24" x 24"
Premium Grade

16" wide x 6' tall
Tire Display Rack ACWB-18270

Model No.	Product / Part No.	Description	Ship Wt. / Ea. (Lbs.)
MP30	ACWB-10924	30" x 30" x 7" Mortar Pan (Gray)	10
MP30E	ACWB-11080	30" x 30" x 7" Mortar Pan (Black)	6
MB60	ACWB-10995	32" x 60" x 11" Mortar Box (Gray)	27
MB60E	ACWB-11359	32" x 60" x 11" Mortar Box (Black)	22
MBD24	ACWB-18264	24" x 24" Mortar Board (Gray)	4
MBDE24	ACWB-11358	24" x 24" Mortar Board (Black)	4

For more information on Brentwood's versatile line of top quality polyethylene wheelbarrows and mortar products, visit our Web site at www.brentwoodindustries.com

17" wide x 13" tall
Counter Card – (Free)

Please use the component parts below to make the correct wheelbarrow

	Model No.	To Make This Part # Use	Description	Pan	Hardware Tire Kit	Handels (each)
	ProBoss	GRAY				
1	PWSS	ACWB11689	6 Cu 1 Whl. 2-ply gray steel std. chassis wheelbarrow	CCWB16520	ACWB11686	CCWB16322
2	PW6S	ACWB10910	6 Cu 1 Whl. 2-ply gray HDPE std. chassis wheelbarrow	ACWB10876-S	ACWB16300	CCWB16322
3	PW6S (W-chassis)	ACWB18210	6 Cu 1 Whl. 2-ply gray HDPE new wider chassis wheelbarrow	ACWB18288 or 10876WS	ACWB18204	CCWB16610
4	PW6D	ACWB10933	6 Cu 2 Whl. 2-ply gray HDPE std. chassis wheelbarrow	ACWB10876-D	ACWB16301	CCWB16322
5	PW6D (W-chassis)	ACWB18211	6 Cu 2 Whl. 2-ply gray HDPE new wider chassis wheelbarrow	ACWB18289 or 10876WD	ACWB18205	CCWB16610
6	PW7S	ACWB11040	7 Cu 1 Whl. 2-ply gray HDPE std. chassis wheelbarrow	ACWB11016-S	ACWB16300	CCWB16322
7	PW7S (W-chassis)	ACWB18212	7 Cu 1 Whl. 2-ply gray HDPE new wider chassis wheelbarrow	ACWB18290 or 11016WS	ACWB18204	CCWB16610
8	PW7D	ACWB11041	7 Cu 2 Whl. 2-ply gray HDPE std. chassis wheelbarrow	ACWB11016-D	ACWB16301	CCWB16322
9	PW7D (W-chassis)	ACWB18213	7 Cu 2 Whl. 2-ply gray HDPE new wider chassis wheelbarrow	ACWB18291 or 11016WD	ACWB18205	CCWB16610
10	PW8S	ACWB10911	8 Cu 1 Whl. 2-ply gray HDPE std. chassis wheelbarrow	ACWB10877-S	ACWB16300	CCWB16322
11	PW8S (W-chassis)	ACWB18214	8 Cu 1 Whl. 2-ply gray HDPE new wider chassis wheelbarrow	ACWB18292 or 10877WS	ACWB18204	CCWB16610
12	PW8D	ACWB10912	8 Cu 2 Whl. 2-ply gray HDPE std. chassis wheelbarrow	ACWB10877-D	ACWB16301	CCWB16322
13	PW8D (W-chassis)	ACWB18215	8 Cu 2 Whl. 2-ply gray HDPE new wider chassis wheelbarrow	ACWB18293 or 10877WD	ACWB18205	CCWB16610
14	PW10S (W-chassis)	ACWB18216	10 Cu 1 Whl. 2-ply gray HDPE new wider chassis wheelbarrow	ACWB18294 or 10878WS	ACWB18205	CCWB16610
15	PW10D	ACWB10913	10 Cu 2 Whl. 2-ply gray HDPE std. chassis wheelbarrow	ACWB10878-D	ACWB16301	CCWB16322
16	PW10D (W-chassis)	ACWB18217	10 Cu 2 Whl. 2-ply gray HDPE new wider chassis wheelbarrow	ACWB18295 or 10878WD	ACWB18205	CCWB16610
17	PWSSF	ACWB11675	6 Cu 1 Whl. no-flat gray steel std. chassis wheelbarrow	CCWB16520	ACWB11682	CCWB16322
18	PW6SF	ACWB11676	6 Cu 1 Whl. no-flat gray HDPE std. chassis wheelbarrow	ACWB10876-S	ACWB11683	CCWB16322
19	PW6SF (W-chassis)	ACWB18225	6 Cu 1 Whl. no-flat gray HDPE new wider chassis wheelbarrow	ACWB18288 or 10876WS	ACWB18208	CCWB16610
20	PW6DF	ACWB11677	6 Cu 2 Whl. no-flat gray HDPE std. chassis wheelbarrow	ACWB10876-D	ACWB11684	CCWB16322
21	PW6DF (W-chassis)	ACWB18226	6 Cu 2 Whl. no-flat gray HDPE new wider chassis wheelbarrow	ACWB18289 or 10876WD	ACWB18209	CCWB16610
22	PW7SF	ACWB11678	7 Cu 1 Whl. no-flat gray HDPE std. chassis wheelbarrow	ACWB11016-S	ACWB11683	CCWB16322
23	PW7SF (W-chassis)	ACWB18227	7 Cu 1 Whl. no-flat gray HDPE new wider chassis wheelbarrow	ACWB18290 or 11016WS	ACWB18208	CCWB16610
24	PW7DF	ACWB11679	7 Cu 2 Whl. no-flat gray HDPE std. chassis wheelbarrow	ACWB11016-D	ACWB11684	CCWB16322
25	PW7DF (W-chassis)	ACWB18228	7 Cu 2 Whl. no-flat gray HDPE new wider chassis wheelbarrow	ACWB18291 or 11016WD	ACWB18209	CCWB16610
26	PW8SF	ACWB11680	8 Cu 1 Whl. no-flat gray HDPE std. chassis wheelbarrow	ACWB10877-S	ACWB11683	CCWB16322
27	PW8SF (W-chassis)	ACWB18229	8 Cu 1 Whl. no-flat gray HDPE new wider chassis wheelbarrow	ACWB18292 or 10877WS	ACWB18208	CCWB16610
28	PW8DF	ACWB11681	8 Cu 2 Whl. no-flat gray HDPE std. chassis wheelbarrow	ACWB10877-D	ACWB11684	CCWB16322
29	PW8DF (W-chassis)	ACWB18230	8 Cu 2 Whl. no-flat gray HDPE new wider chassis wheelbarrow	ACWB18293 or 10877WD	ACWB18209	CCWB16610
30	PW10DF	ACWB18167	10 Cu 2 Whl. no-flat gray HDPE std. chassis wheelbarrow	ACWB10878-D	ACWB11684	CCWB16322
31	PW10DF (W-chassis)	ACWB18231	10 Cu 2 Whl. no-flat gray HDPE new wider chassis wheelbarrow	ACWB18295 or 10878WD	ACWB18209	CCWB16610
32	PWSSX	ACWB11690	6 Cu 1 Whl. 4-ply gray steel std. chassis wheelbarrow	CCWB16520	ACWB11687	CCWB16322
33	PW6SX	ACWB11042	6 Cu 1 Whl. 4-ply gray HDPE std. chassis wheelbarrow	ACWB10876-S	ACWB16362	CCWB16322
34	PW6SX (W-chassis)	ACWB18218	6 Cu 1 Whl. 4-ply gray HDPE new wider chassis wheelbarrow	ACWB18288 or 10876WS	ACWB18206	CCWB16610
35	PW6DX	ACWB11043	6 Cu 2 Whl. 4-ply gray HDPE std. chassis wheelbarrow	ACWB10876-D	ACWB16363	CCWB16322
36	PW6DX (W-chassis)	ACWB18219	6 Cu 2 Whl. 4-ply gray HDPE new wider chassis wheelbarrow	ACWB18289 or 10876WD	ACWB18207	CCWB16610
37	PW6SXP *(New)*	ACWB18260	6 Cu 1 Whl. 4-ply gray HDPE new Pour wide chassis wheelbarrow	ACWB18271	ACWB18247	CCWB16610
38	PW6DXP *(New)*	ACWB18261	6 Cu 2 Whl. 4-ply gray HDPE new Pour wide chassis wheelbarrow	ACWB18272	ACWB18248	CCWB16610
39	PW6SFP *(New)*	ACWB18262	6 Cu 1 Whl. no-flat tire gray HDPE new Pour wide chassis wheelbarrow	ACWB18271	ACWB18249	CCWB16610
40	PW6DFP *(New)*	ACWB18263	6 Cu 2 Whl. no-flat tire gray HDPE new Pour wide chassis wheelbarrow	ACWB18272	ACWB18250	CCWB16610
41	PW6SP *(New)*	ACWB18258	6 Cu 1 Whl. 6" tire gray HDPE new Pour wide chassis wheelbarrow	ACWB18271	ACWB18245	CCWB16610
42	PW6DP *(New)*	ACWB18259	6 Cu 2 Whl. 6" tire gray HDPE new Pour wide chassis wheelbarrow	ACWB18272	ACWB18246	CCWB16610
43	PW7SX	ACWB11044	7 Cu 1 Whl. 4-ply gray HDPE std. chassis wheelbarrow	ACWB11016-S	ACWB16362	CCWB16322
44	PW7SX (W-chassis)	ACWB18220	7 Cu 1 Whl. 4-ply gray HDPE new wider chassis wheelbarrow	ACWB18290 or 11016WS	ACWB18206	CCWB16610
45	PW7DX	ACWB11045	7 Cu 2 Whl. 4-ply gray HDPE std. chassis wheelbarrow	ACWB11016-D	ACWB16363	CCWB16322
46	PW7DX (W-chassis)	ACWB18221	7 Cu 2 Whl. 4-ply gray HDPE new wider chassis wheelbarrow	ACWB18291 or 11016WD	ACWB18207	CCWB16610
47	PW8SX	ACWB11046	8 Cu 1 Whl. 4-ply gray HDPE std. chassis wheelbarrow	ACWB10877-S	ACWB16362	CCWB16322
48	PW8SX (W-chassis)	ACWB18222	8 Cu 1 Whl. 4-ply gray HDPE new wider chassis wheelbarrow	ACWB18292 or 10877WS	ACWB18206	CCWB16610
49	PW8DX	ACWB11047	8 Cu 2 Whl. 4-ply gray HDPE std. chassis wheelbarrow	ACWB10877-D	ACWB16363	CCWB16322
50	PW8DX (W-chassis)	ACWB18223	8 Cu 2 Whl. 4-ply gray HDPE new wider chassis wheelbarrow	ACWB18293 or 10877WD	ACWB18207	CCWB16610
51	PW10DX	ACWB11048	10 Cu 2 Whl. 4-ply gray HDPE std. chassis wheelbarrow	ACWB10878-D	ACWB16363	CCWB16322
52	PW10DX (W-chassis)	ACWB18224	10 Cu 2 Whl. 4-ply gray HDPE new wider chassis wheelbarrow	ACWB18295 or 10878WD	ACWB18207	CCWB16610
	WorkHorse	RED				
53	PWWHS	ACWB11468	Brick & Block cart 1 Whl. 2-ply	CCWB16459	CCWB16460	ACWB16477
54	PWWHD	ACWB11362	Brick & Block cart 2 Whl. 2-ply	CCWB16459	CCWB16460	ACWB16465
55	PWWHSX	ACWB11469	Brick & Block cart X-HD 1 Whl. 4-ply	CCWB16459	CCWB16460	ACWB16478
56	PWWHDX	ACWB11363	Brick & Block cart X-HD 2 Whl. 4-ply	CCWB16459	CCWB16460	ACWB16466
	HeavyDuty	BLUE				
57	HD6S	ACWB11150	6 Cu 1 Whl. 2-ply blue HDPE std. chassis wheelbarrow	ACWB18281 or 11140-S	ACWB16410	CCWB16321 or 16615
58	HD6D	ACWB11151	6 Cu 2 Whl. 2-ply blue HDPE std. chassis wheelbarrow	ACWB18282 or 11140-D	ACWB16411	CCWB16321 or 16615
59	HD8D	ACWB11152	8 Cu 1 Whl. 2-ply blue HDPE std. chassis wheelbarrow	ACWB18283 or 11141-D	ACWB16411	CCWB16321 or 16615
60	HD10D	ACWB11153	10 Cu 2 Whl. 2-ply blue HDPE std. chassis wheelbarrow	ACWB18284 or 11156-D	ACWB16411	CCWB16321 or 16615
	GroundsKeeper	GREEN				
61	GK6S	ACWB11660	6 Cu 1 Whl. 6" wide tire green wider chassis wheelbarrow	ACWB18285 or 11651-S	ACWB11658	CCWB16611/16540/16586
62	GK6D	ACWB11663	6 Cu 2 Whl. 6" wide tire green wider chassis wheelbarrow	ACWB18285 or 11651-S	ACWB11659	CCWB16611/16540/16586
63	GK6SF *(New)*	ACWB18242	6 Cu 1 Whl. 6" wide tire green flat front wide chassis wheelbarrow	ACWB18273	ACWB11658	CCWB16611/16540/16586
64	GK6DF *(New)*	ACWB18243	6 Cu 2 Whl. 6" wide tire green flat front wide chassis wheelbarrow	ACWB18273	ACWB11659	CCWB16611/16540/16586
65	GK8S	ACWB11661	8 Cu 1 Whl. 6" wide tire green wider chassis wheelbarrow	ACWB18286 or 11652-S	ACWB11658	CCWB16611/16540/16586
66	GK8D	ACWB11664	8 Cu 2 Whl. 6" wide tire green wider chassis wheelbarrow	ACWB18286 or 11652-S	ACWB11659	CCWB16611/16540/16586
67	GK10S	ACWB11662	10 Cu 1 Whl. 6" wide tire green wider chassis wheelbarrow	ACWB18287 or 11655-S	ACWB11658	CCWB16611/16540/16586
68	GK10D	ACWB11665	10 Cu 2 Whl. 6" wide tire green wider chassis wheelbarrow	ACWB18287 or 11655-S	ACWB11659	CCWB16611/16540/16586
69	GKMO	ACWB11691	5 cu 1 Whl. 6" wide tire green garden cart with tray	ACWB11699	ACWB11701	CCWB16611/16540/16586
	Contractor	BLACK				
70	AJSS	ACWB11688	6 Cu 1 Whl. 2-ply black steel std. chassis wheelbarrow	CCWB16519	ACWB11685	CCWB16453 or 16615
71	AJ6S	ACWB11342	6 Cu 1 Whl. 2-ply black HDPE std. chassis wheelbarrow	ACWB18278 or 11295-S	ACWB16442	CCWB16453 or 16615
72	AJ6D	ACWB11343	6 Cu 2 Whl. 2-ply black HDPE std. chassis wheelbarrow	ACWB18278 or 11295-S	ACWB16443	CCWB16453 or 16615
73	AJ8S	ACWB11344	8 Cu 1 Whl. 2-ply black HDPE std. chassis wheelbarrow	ACWB18279 or 11296-S	ACWB16442	CCWB16453 or 16615
74	AJ8D	ACWB11345	8 Cu 2 Whl. 2-ply black HDPE std. chassis wheelbarrow	ACWB18279 or 11296-S	ACWB16443	CCWB16453 or 16615
75	AJ10D	ACWB11346	10 Cu 2 Whl. 2-ply black HDPE std. chassis wheelbarrow	ACWB18280 or 11297-S	ACWB16443	CCWB16453 or 16615

BRENTWOOD INDUSTRIES
PLASTICS FORMING AND MOLDING

Where your best ideas take shape.®

621 Brentwood Drive • P.O. Box 605 • Reading, PA 19603-0605 • 610.376.1900 • Fax 610.736.1209

www.brentwoodindustries.com • e-mail: wbsales@brentwoodindustries.com